PREX PRO

Water Gun

Instructions for use and routine maintenance

www.prexpro.eu

Index

Knowledge of the machine....4
Standard accessories....5
What is a high pressure cleaner....5
Safety rules....6
Warnings....6
Operating and maintenance instructions and procedures....8
Installation....11
Prerequisites....11
Operation....11
Use of detergent injector....12
Chemical and detergents allowed for use....12
Safety and protection devices....13
By-Pass valve....13
Main magnetothermic switch....13
Switching off and storage....14
Maintenance....15
Possible troubles - their causes and remedies....16
Warranty terms and conditions....17
Validity....17
Warranty Conditions....17
Declaration of conformity....19
Electrical diagram....20

Warning

Read this instruction manual before operating the machine.

Original instructions

Knowledge of the machine

Serial Number:		→ Serial Number
Mod. Code:		→ Model code
Volt/Phase: Hertz: Abs. Current: Protection: Motor Power:		→ Electrical data
Pressure: Permissible Press:		→ Pressure data
Flow Rate:		→ Flow Rate
Weight:		→ Weight
Date:		→ Production Data (Week/year

Legend:

1. Electric Wire
2. Oil inlet
3. Detergent adjust. on the Lance
4. High pressure outlet
5. Water inlet
6. Main switch
7. Pressure Gauge
8. High pressure hose
9. Gun with lance

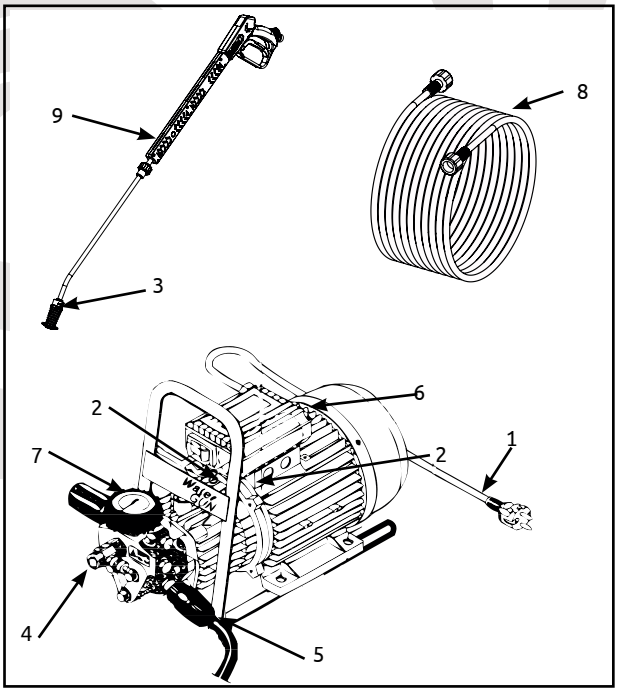

Note: Max noise emission of the high pressure cleaner 78 Db

Standard accessories

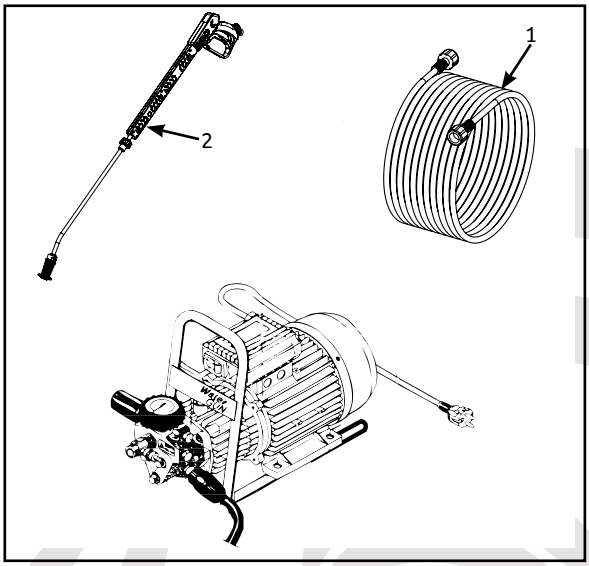

Legend:

1. High pressure hose
2. Gun + single lance

What is a high pressure cleaner

The machine you have bought is a cold water high pressure cleaners, suitable to clean any type of surface, by simply adapting the washing parameters. The cleaning power of the water stream can be improved by feeding the machine with hot water, at the max temperature of 70 °C.
The adjustable detergent device allows for dosing the chemical products according to the different cleaning task. The distance between the nozzle and the surface to be cleaned is important, although the efficiency of the water jet decreases proportionally to the ideal distance of work when start to be parallel. The operator has of course to consider the nature of the objects he's going to clean, and their resistance to mechanical action of pressure, to the terminal action of temperature and to the chemical action of detergent: he will use a convenient jet, by limiting or by increasing the a.m. parameters in a logical way. The operator will carefully observe all the directions and advices given in the present manual in order to prevent accident due to improper use of the cleaner. Never forget that a high pressure water jet can turn into a very harmful weapon.

Safety rules

Before operating the machine make sure that the connection to the power supply complies with the in force safety rules and the voltage and KW correspond to the data stated onto the machine label. Never use the electropump if the connection is not properly made. In case of extension cord, make sure that the following conditions are respected: lenght of extension up to 50 m for wires with section up to 4 sqmm; the section becomes 4 and 5 sqmm respectively in case of 3-phase machines connected at 400 Volt.
The junction between the wire and the extension cord must be properly made according to the rules.Before turning on the motor, make sure that the gun trigger is locked on the off position, otherwise the high pressure water jet coming out suddenly may turn the lance into a very harmful thing. If, for switching the machines off , or for any other reason whatsoever the lance is let down and the pump is running in By-pass, lock the gun trigger in the off position by means of the special lock device provided in order to avoid incidental actioning.
Do not intervene on the machine and its accessories when operating.
Do not direct the water jet towards people, animals, frail objects or the machine itself

Warnings

- The electropump must be continuously and sufficiently fed with clean water at volume that must be at least to that of the pump.
- Should the pump run in dry mode, the gaskets and may be seriously damaged.
- Although the electrical equipment of the machines is protected against water, never use the machines under the rain and never direct the water against the pressure cleaner itself.
- Avoid operate the machine in places that are non aerated enough and care not to cover it, thus reducing the necessary aereation inside.
- Do not let the electropump exposed to severe temperatures try protect it against icing.
- Do not feed the machines with water having a temperature that exceeds 70 °C, otherwise this will inevitably cause seals damages.
- Carefully avoid to let the machines run in BY-Pass condition for longer than 4 hours * in order to prevent the recirculation By-Pass water from heating

up too much.

- On Total - Stop version the motor switches off immediately when the gun trigger is released. The motor switches on again when the gun trigger is pressed again.

Operating and maintenance instructions and procedures

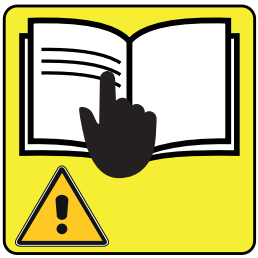

Reading this instructions manual before using the machine.

The connection to the main must be carried out by a skilled electrician and must respond to the latest IEC rules released on the electrical connections.
It is strongly recommended that the electrical power supply for this machines includes either a device of residual current that must cut-off the Power Supply if the dispersion power to the earth exceeds 30 mA for 30 mS, or an earth control circuit.

The high pressure beams can be very dangerous if they are used incorrectly. The water beam must never be directed towards people, animals, electrical apparatuses under Voltage or the cleaner itself.
Never direct the high pressure jet against yourself or others with purpose of cleaning clothes or shoes.

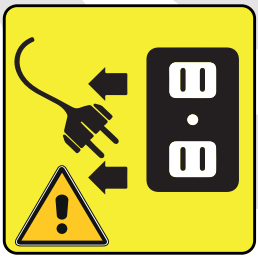

Before any cleaning and reparing operation the machine must always be disconnected from the power supply.

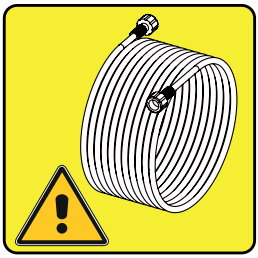

The high pressure hose are very important for the safety of the machines. In case of replacement, always use original spares. For any need of spares or technical assistance, apply to the nearest authorised service center.

The high pressure cleaners must never be used by children or by people who are not aware of the procedures and warming stated in this manual.

Never use the machine when other people are near to your operating site.

This machines has been conceived to be used with a cleaning product supplied or recommended by the manufacturer. The use of their detergents or chemical matters may compromise the safety of the machine.
Only liquid detergents are to be used.

When using the machine, wear always protective clothes.

Any time the machines is turned off discharge the pressure left in the hose by pulling the gun trigger.

Avoid that vehicles move near the machines and squeeze the high pressure hose.

Provide that the machines is not subject to severe temperatures: Ice may form up and cause considerable damage to the high pressure pump.

Compliance with the above rules will allow you to use the pressure washer for a long time, avoiding the causes of breakdowns and dangers deriving from the use of the machine itself.

Installation

Prerequisites

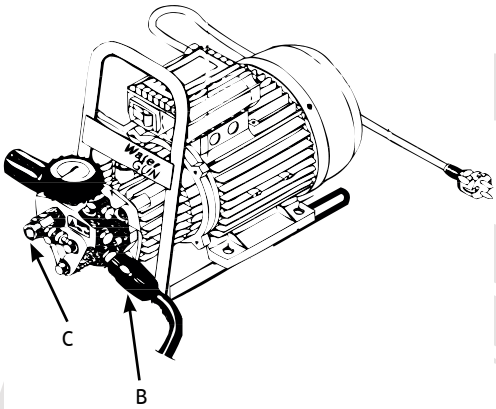

1. Make sure that the power supply characteristics of your electric plug match with those indicated on the machine plate. Make sure that your electrical equipment is provided with an efficient earth and with a life saving differential switch with intervention threshold from 30 mA or below. Once the above has been verified, plug your machine into the electrical socket.
2. Position the machines on an even floor.
3. Verify that the water supply volume is enought (min. Pressure 1,5 Bar - max.pressure 4bar), then connect the water feeding hose to the special connector B and the high pressure hose to the outlet connector C.
4. Open the water feeding tap.

Operation

1. Press the magneto-thermic main switch to “On”.
2. Pull the trigger in order to let air of the pipes circuit.
3. The recoil force of the High pressure Cleaner varies between 15,7N and 43,3N

Warning

Because of the high pressure of the water jet a counter strike occurs. The operator should hold the gun and the handle firmly.

Use of detergent injector

This device makes it possible to intake liquid detergent at the pump water delivery. In order to adjust the quantity of detergent to be intaken, turn the valve B on the body of the machine. To suck automatically the detergent, pull the device A.

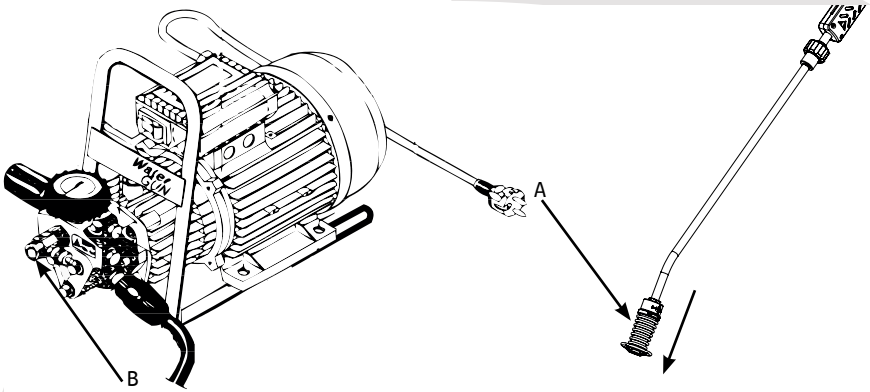

Chemical and detergents allowed for use

Always use detergents and chemicals specific for use on high pressure cleaners, of known brandad accompanied by technical specifications.

In case of doubts apply to the manufacturer.
Chemicals which can cause explosion or intoxication are not allowed

Read carefully the directions for use of all products you have intention to use and ascertain their possible dangerousness. (If irritating, toxic or otherwise noxious)

Always use suitable individual protective means.

CAUTIONS: Never waste the cleaning solutions directly in the enviroment. In any case make sure of their non toxicity and bio-degradability.

Safety and protection devices

By-Pass valve

A by-pass with a ball non return valve and packing on O-ring.
The BY-pass activation pressure is adjustable by means of a knob, for values included 45 and 200 bar.
Purpose of the By-pass is to let the delivery pressure exceeds, for any reason whatsoever the pre-set value.
For instance, the by-pass valve is activated when there is an obstruction after the pump delivery (e.g. a clogged nozzle) or any time the gun trigger is released during the pump running.

Main magnetothermic switch

This part provides for the protection to the whole electrical installation and comes up when a short -circuit, an overabsorption or an overtemperature occur at the electrical equipment.
In this case let cool for few minutes the motor, lock the gun trigger using the lock device to prevent inconvenient.

Switching off and storage

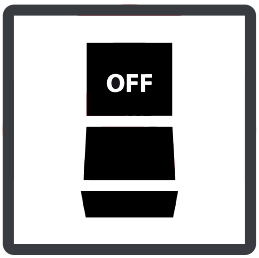

Switch off the main switch.

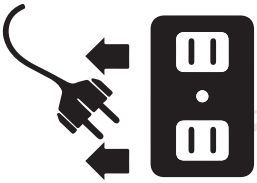

Disconnect from the electrical mains, turn the water tap off and disconnect the water feeding hose.

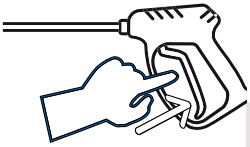

In order to make the next starting of the machine easier, and in order to extended the motor's life, when the machine is off discharge the pressure water in the circuit by pulling the gun trigger.

Warning

When storing the machine wind the wire and the high pressure hose in order not to damage them, then store the high pressure cleaner in a place protected form cold and where it cannot be reached by abusers.

Maintenance

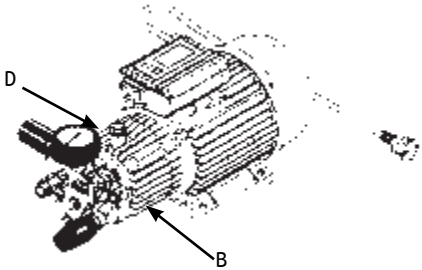

Check the oil level in the pump dailly. Through the special level indicator “D” and if it is necessary fill in more oil until the right level shown in the picture is reached. Use oil type 15W40.
For the oil replacement remove the cap with level “D“.unscrew the cap “B” and discharge the oil. Replace the oil every one month or every 300 operation hours.

Every two weeks or every 50 Hours of operation, clean the water filter through a compressed air stream.

Warning

Used lubrificants must be collected and treated in accordance with legal dispositions, since duping them into the environment can cause pollution of water channels.

Possible troubles - their causes and remedies

Trouble	Cause	Remedy
The pump don't reach the require pressure	Nozzle inadequate or worn unloader valve seat faulty	Change nozzle, replace the valve seat. Clean or replace valves
The pump is noisy	Pump sucking air	Check suction mainfold and connection
Pressure gauge fluctuates	Valves blocked by foreign particles, or worn Gasket worn High temperature of pumped liquid	Clean or replaces valves Replace gaskets Reduce temperature of pumped liquid
Water leaks from the bottom of the pump	Piston gasket worm	Replace Piston gasket
Water leaks from head	Head O-ring worm	Replace O-ring
Oil leaks from the bottom of the pump	Oil seals worm	Replace seals
Over pressure (build up) when gun is closed	Overpressure ehwn closing rhe lance	Check the valve and set new pressure level.

Warranty terms and conditions

Validity

This product is covered by a twenty-four (24) months warranty, starting from the purchase and/or test date. This warranty protects the user against manufacturing or material defects. In case the machine is used for professional applications, this warranty covers a period of twelve (12) months (ex C.L. no°422 art.1 par. B).

Warranty Conditions

1. The in-warranty repair is accepted only if the product is accompanied by the purchase receipt and the test report issued by the supplier.
2. Manufacturing company duty is limited to the repair and, at its own discretion, the replacement of the whole product or of single faulty components.
3. The suppliers and the technicians allowed to carry out in-warranty repairs are only those expressly authorized by the manufacturer
4. This product or its materials are not considered as faulty in case the customer needs to adapt the machine to technical or national safety regulations other than those in force in the country originally foreseen for the product. No refund shall be granted for damages arising from the above-mentioned modifications, or other changes not connected to the original design of the product, carried out by the customer/user or by unauthorized people.
5. The warranty does not apply to:
   a. Periodical checks, maintenance operations, replacement of components subject to wear;
   b. Transport, transfer or installation of the product;
   c. Damages caused by fire, water, natural events, war and riots, incorrect power supply, insufficient ventilation of the installation place, and any other cause not connected the manufacturer;
   d. Incorrect use, operating errors and wrong or unwary installation;
   e. Damages to the product due to non original manufacturer spare parts use;
   f. Damages to the product or insufficient performance due to incorrect installation after purchase;
   g. Every damage to the product due to negligence.
6. This Warranty is valid for every person formally having the propriety of the product during the above-mentioned period.
7. This Warranty does not affect the rights of the customer as prescribed by

the law in force in the country, nor the rights of the customer towards the retailer arising from the contract of sale.

Declaration of conformity

I, the undersigned, acting legal representative of the company
Declare that the following appliances:

Water Gun

Comply with the current laws in force, which implement the following directives and also declare that all the following regulations and/or technical specifications have been applied:

2004/108/CE EMC	**2006/42/CE Machinery**
EN 61000-3-2/A2:2009	EN 60335-1:2010
EN 61000-3-3:2008	EN 60335-2-79:2009
EN 55014-1/A1:2009	EN 62233:2008
EN 55014-2/A2:2008	EN ISO 12100-1/A1:2009
	EN ISO 13857:2008

CE

The production company is:

SIMMM Engineering s.r.l.
Via A. Martini 6-8-10
20092 - Cinisello Balsamo (MI) - Italia
Tel +39 02 66011851

Electrical diagram

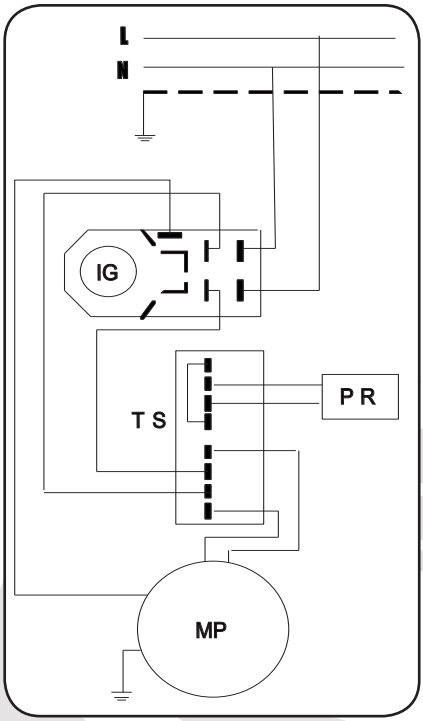

Single phase with delayed total stop

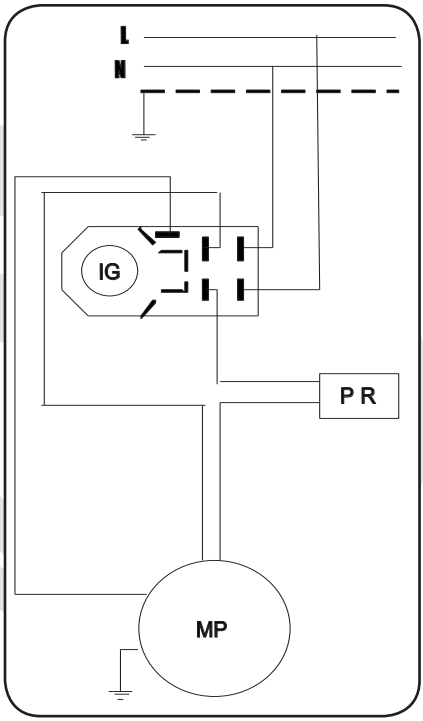

Single phase with direct total stop

	Legend
IG	Main switch
MP	Pump engine
PR	Pressure switch
R	Relay
TS	Total stop

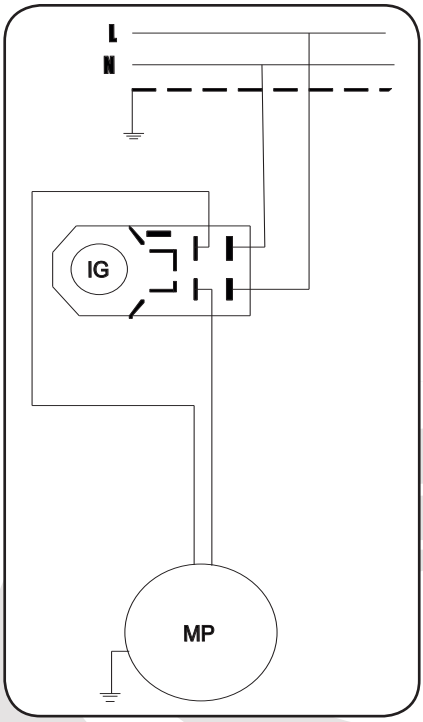

Single phase electric schema

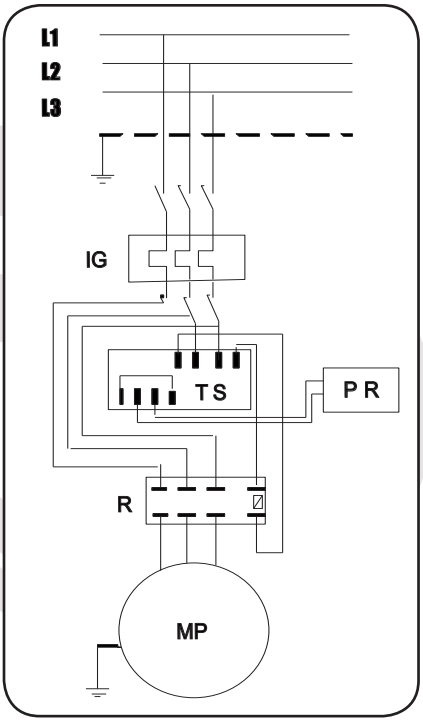

Three phase with delayed total stop

	Legend
IG	Main switch
MP	Pump engine
PR	Pressure switch
R	Relay
TS	Total stop

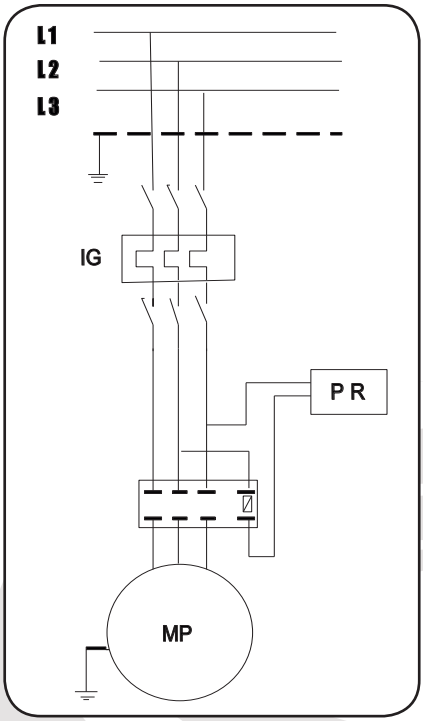

Three phase with direct total stop

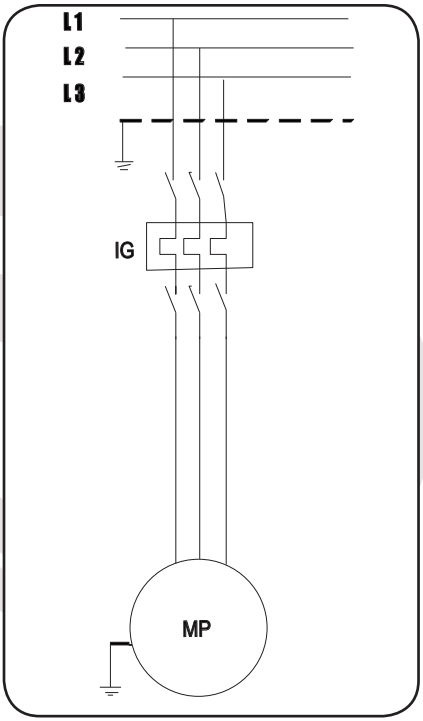

Three phase electric schema

	Legend
IG	Main switch
MP	Pump engine
PR	Pressure switch
R	Relay
TS	Total stop

Parts number: 03.546 rev. 5
This manual is available in PDF over request: info@prexpro.eu